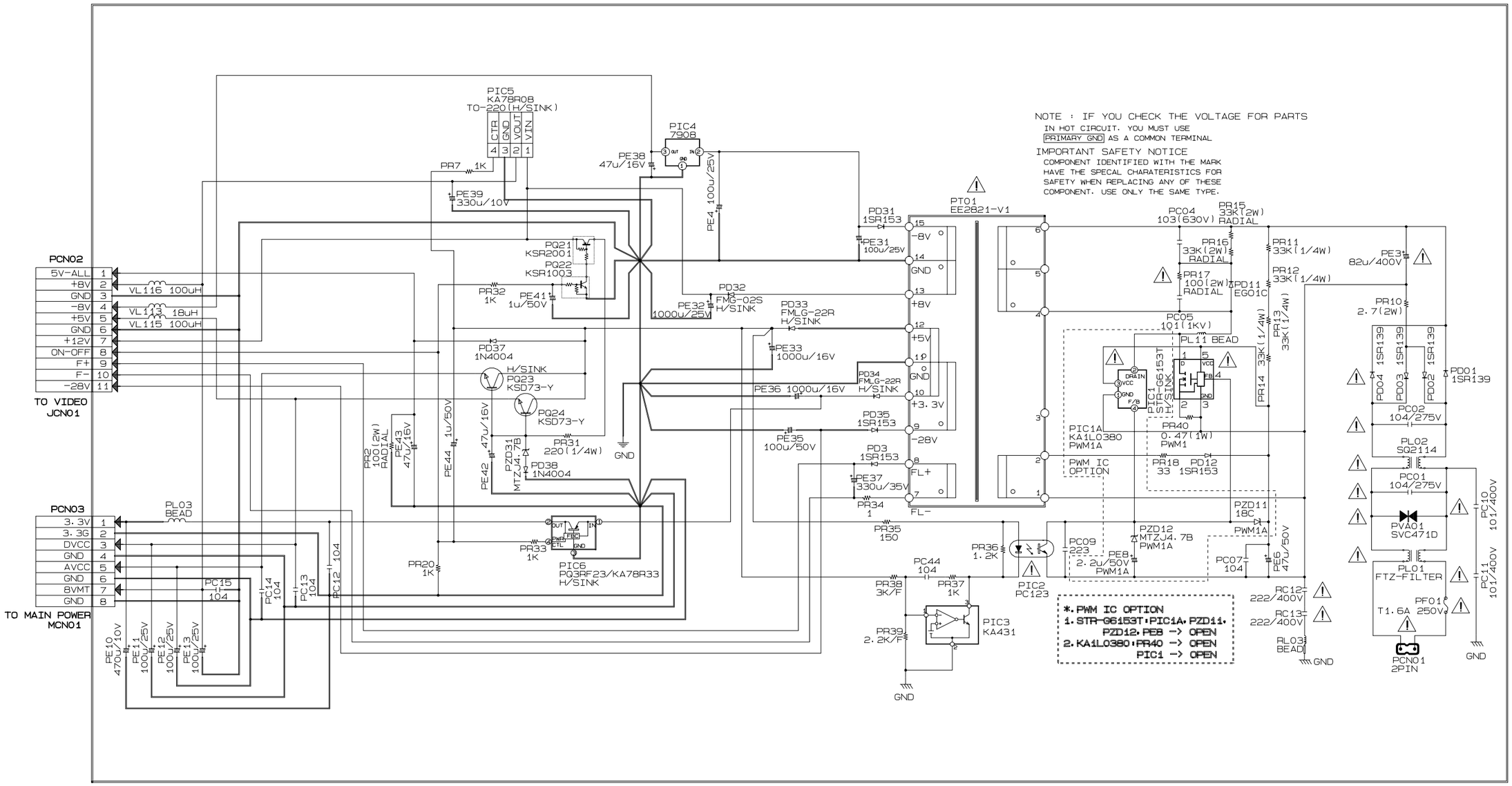
NOTE : IF YOU CHECK THE VOLTAGE FOR PARTS
IN HOT CIRCUIT. YOU MUST USE
PRIMARY GND AS A COMMON TERMINAL
IMPORTANT SAFETY NOTICE
COMPONENT IDENTIFIED WITH THE MARK
HAVE THE SPECAL CHARATERISTICS FOR
SAFETY WHEN REPLACING ANY OF THESE
COMPONENT. USE ONLY THE SAME TYPE.
PCN02
5V-ALL 1
+8V 2
GND 3
-8V 4
+5V 5
GND 6
+12V 7
ON-OFF 8
F+ 9
F- 10
-28V 11
TO VIDEO
JCN01
PCN03
3.3V 1
3.3G 2
DVCC 3
GND 4
AVCC 5
GND 6
8VMT 7
GND 8
TO MAIN POWER
MCN01
VL116 100uH
VL113 18uH
VL115 100uH
PIC5
KA78R08
TO-220(H/SINK)
CTR GND VOUT VIN
4 3 2 1
PR7 1K
PE39
330u/10V
PIC4
7908
PE38
47u/16V
PE4 100u/25V
PQ21
KSR2001
PQ22
KSR1003
PR32
1K
PE41
1u/50V
PE32
1000u/25V
PD32
FMG-02S
H/SINK
PD33
FMLG-22R
H/SINK
PD37
1N4004
H/SINK
PQ23
KSD73-Y
PQ24
KSD73-Y
PR31
220(1/4W)
PD38
1N4004
PZD31
MTZJ4.7B
PE42
47u/16V
PE44
1u/50V
PR2
100(2W)
RADIAL
PE43
47u/16V
PL03
BEAD
PR33
1K
PIC6
PQ3RF23/KA78R33
H/SINK
PR20
1K
PC15
104
PC14
104
PC13
104
PC12
104
PE10
470u/10V
PE11
100u/25V
PE12
100u/25V
PE13
100u/25V
GND
PD31
1SR153
PE31
100u/25V
PE33
1000u/16V
PD34
FMLG-22R
H/SINK
PE36 1000u/16V
PD35
1SR153
PE35
100u/50V
PD3
1SR153
PE37
330u/35V
PR34
1
PR35
150
-8V
GND
+8V
+5V
GND
+3.3V
-28V
FL+
FL-
PTO1
EE2821-V1
PC04
103(630V)
PR15
33K(2W)
RADIAL
PR16
33K(2W)
RADIAL
PR17
100(2W)
RADIAL
PD11
EG01C
PR11
33K(1/4W)
PR12
33K(1/4W)
PE3
82u/400V
PR10
2.7(2W)
PC05
101(1KV)
PL11 BEAD
PR13
33K(1/4W)
PR14 33K(1/4W)
PIC1
STR-G6153T
H/SINK
PR40
0.47(1W)
PWM1
PIC1A
KA1L0380
PWM1A
PWM IC
OPTION
PR18 33
PD12
1SR153
PD04 1SR139
PD03 1SR139
PD02 1SR139
PD01
1SR139
PC02
104/275V
PL02
SQ2114
PC01
104/275V
PVA01
SVC471D
PL01
FTZ-FILTER
PF01
T1.6A 250V
PCN01
2PIN
PC10
101/400V
PC11
101/400V
PZD11
18C
PWM1A
PZD12
MTZJ4.7B
PWM1A
PC09
223
PE8
2.2u/50V
PWM1A
PC07
104
PE6
47u/50V
PR36
1.2K
PIC2
PC123
PC44
104
PR38
3K/F
PR37
1K
PR39
2.2K/F
PIC3
KA431
RC12
222/400V
RC13
222/400V
RL03
BEAD
*.PWM IC OPTION
1.STR-G6153T:PIC1A.PZD11.
PZD12.PE8 -> OPEN
2.KA1L0380:PR40 -> OPEN
PIC1 -> OPEN